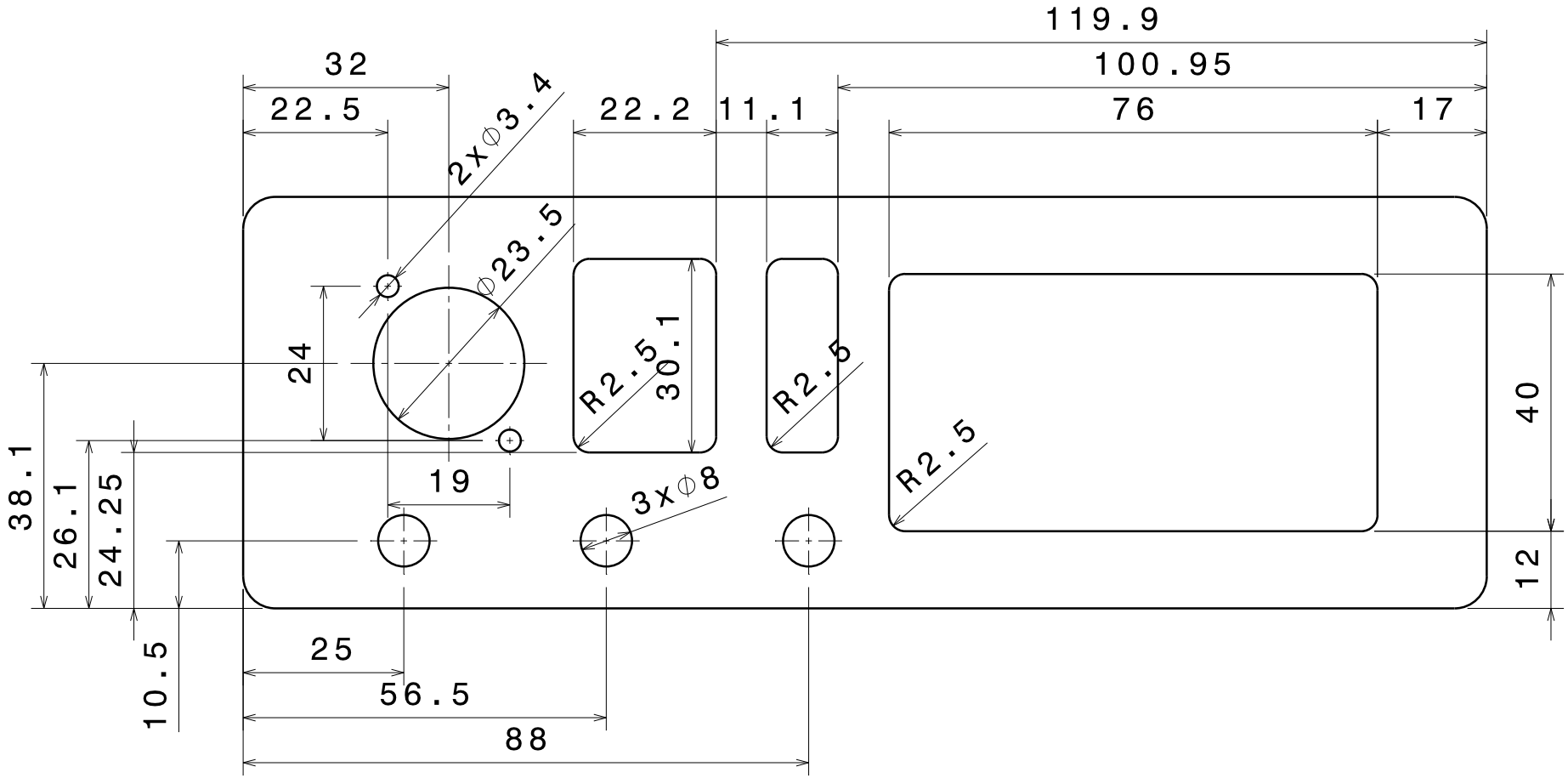

(c) CC-BY-SA

uGen

DRAWING TITLE

Lab power supply, front panel

DRAWN BY NW	DATE 22.02.2018			
CHECKED BY NW	DATE 22.02.2018	SIZE A4	DRAWING NUMBER C-2	REV -
DESIGNED BY NW	DATE 22.02.2018	SCALE 1:1	WEIGHT(kg) -	SHEET 1/1